SETTING OUT DATA			
NAME	Y	X	LEVEL
P1	71924.840	2849267.371	1378.450
P2	71940.140	2849267.371	1378.527
P3	71940.140	2849284.671	1378.613
P4	71924.840	2849284.671	1378.536

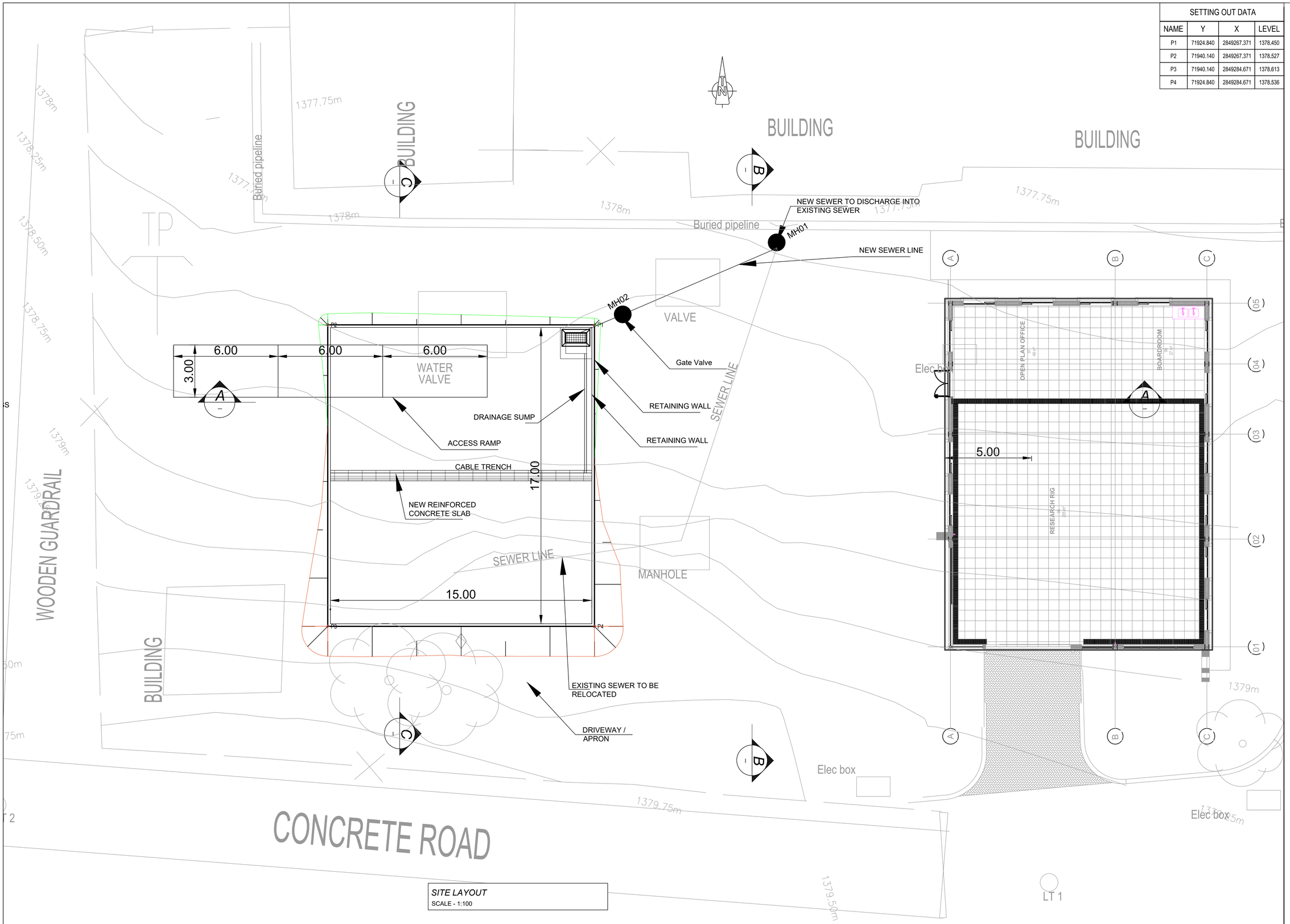

SITE LAYOUT
SCALE - 1:100

NO	DATE	DETAILS	CHK	APPD
B	16/07/2025	SLAB SIZE REDUCED		R.L
A	08/09/2024	ISSUED FOR DISCUSSIONS		R.L

REVISIONS

CLIENT

CSIR

CIVIL ENGINEER

Leshape

PROJECT

CSIR -
SLAB AND RETAINING WALL

DRAWING DESCRIPTION

GENERAL LAYOUT

SCALE	DRAWN	DESIGNED	CHECKED
AS SHOWN	M.LETUMA	M. LETUMA	R. LEKONYANA
APPROVED		DATE	
R. LEKONYANA		08/09/2024	

PROJECT NO	DRG. NO	REVISION	SHEET SIZE
CSIR-SLB-001		C	A1

STATUS

DESIGN

SCALES:
Horizontal 1:1000
Vertical 1:100

DATUM 1376.500

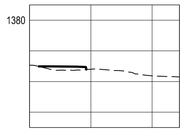

SECTION A-A

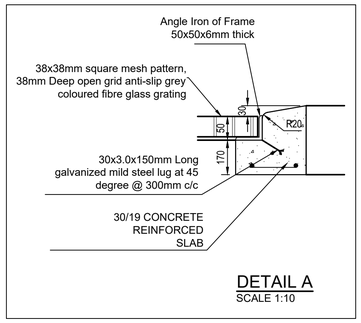

DETAIL A
SCALE 1:10

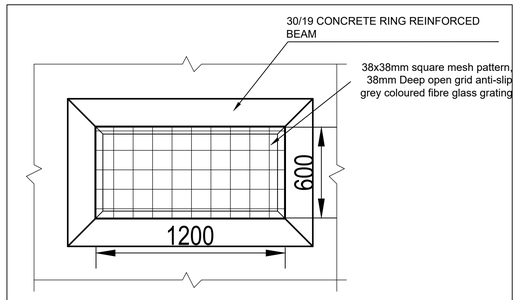

TYPICAL PLAN DETAIL FOR GRID INLET
SCALE 1:20

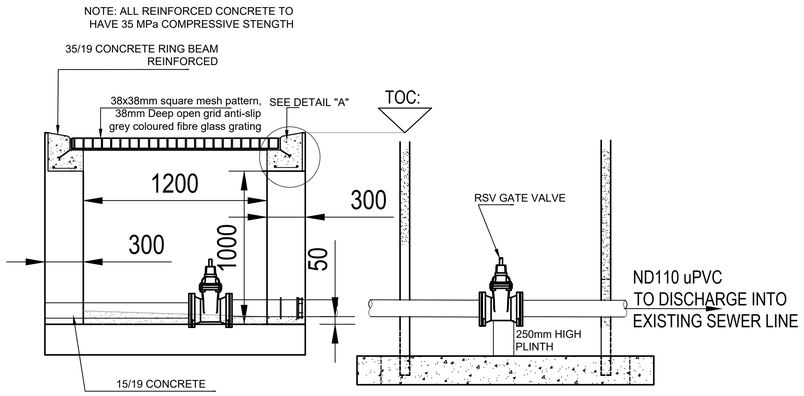

SECTION A-A
SCALE 1:20

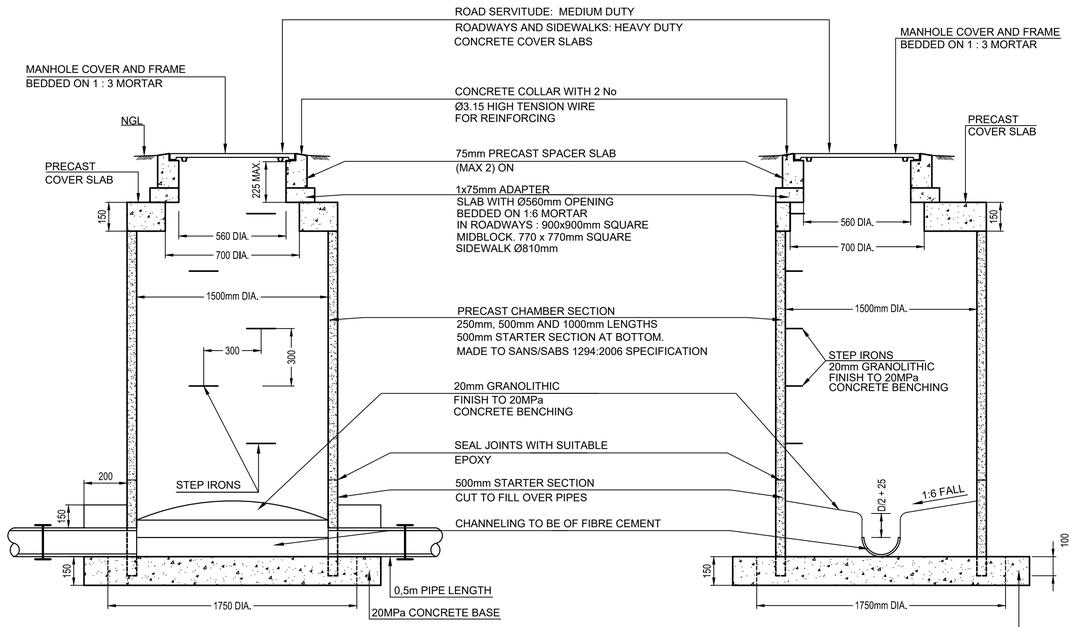

SECTION A-A

SECTION B-B

TYPICAL CROSS-SECTION : SEWER MANHOLES
SCALE 1:20

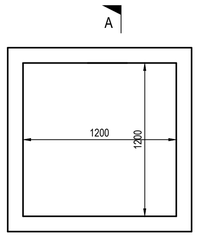

LAYOUT - SUMP
SCALE 1:50

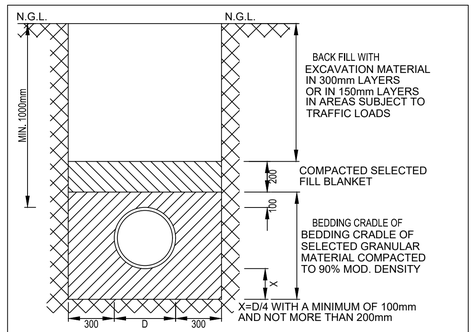

FLEXIBLE PIPE BEDDING - (WATER AND SEWER)
SCALE 1:20

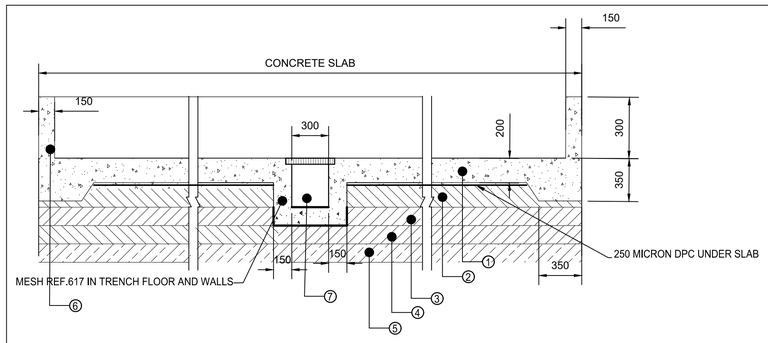

TYPICAL DETAIL ACROSS THE SLAB
SCALE 1:25

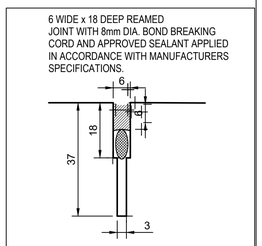

SAW CUT JOINT DETAIL
SCALE 1:1

LEGEND FOR PAVEMENT LAYERS

1. 200mm THICK REINFORCED CONCRETE SLAB. REINFORCED WITH REF. 617 MESH AND AND CONSTRUCTION JOINTS @3.0m AND EXPANSION JOINTS @15m SPACING,
2. BASE: 150mm CEMENTED NATURAL GRAVEL (C4) COMPACTED TO 97% MOD A.A.S.H.T.O. DENSITY;
3. SUB-BASE: 150mm NATURAL GRAVEL (G5) COMPACTED TO 95% MOD A.A.S.H.T.O. DENSITY;
4. SELECTED LAYER: 150mm IMPORTED G7 GRAVEL SUB-BASE LAYER COMPACTED TO 93% MOD A.A.S.H.T.O. DENSITY
5. 150mm TREATMENT OF IN-SITU MATERIAL IN CUT, RIPPING AND RECOMPACTING AT 90% MOD A.A.S.H.T.O. DENSITY TO REACH CBR > 7
6. 130mm THICK, 500mm HIGH CONCRETE RETAINING WALL
7. 400mm DEEP CABLE TRENCH WITH GRATING COVER TO THE ELECTRICAL ENGINEER'S DETAIL

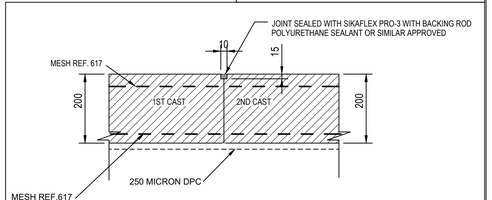

1:10 TYPICAL CONTRACTION JOINT (CJ)

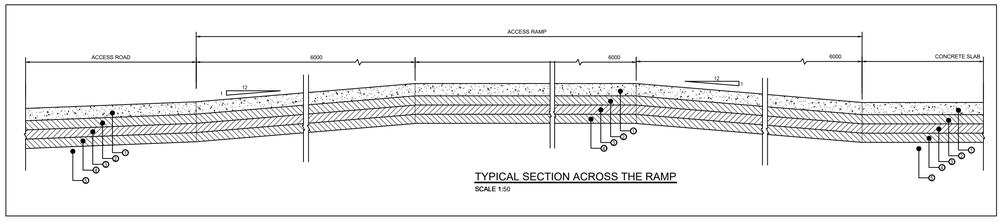

TYPICAL SECTION ACROSS THE RAMP
SCALE 1:50

NO	DATE	DETAILS	CHK	APPD
B	16/07/2025	SLAB SIZE REDUCED		R.L
A	08/08/2024	ISSUED FOR DISCUSSIONS		R.L

REVISIONS

CLIENT: CSIR

CIVIL ENGINEER: Leshape

PROJECT: CSIR - SLAB AND RETAINING WALL

DRAWING DESCRIPTION: DETAILS

SCALE	DRAWN	DESIGNED	CHECKED
AS SHOWN	M.LETUMA	M. LETUMA	R. LEKONYANA

APPROVED: R. LEKONYANA — DATE: 08/09/2024

PROJECT NO	DRG. NO	REVISION	SHEET SIZE
CSIR-SLB-002		C	A1

STATUS: DESIGN